SAPIENZA
UNIVERSITÀ DI ROMA

montalbano®

A New Time-Temperature Indicator (TTI) Based on High-Viscosity Liquids

Marco Maschietti, Marco L. Bianchini

4th Cold Chain Management
Bonn, 27-28 September 2010

Time-Temperature Indicators (TTIs)

What are TTIs?

- **Small** devices providing **easy-to-read, visual** information on the **thermal history** of perishable products
- **Non-electronic** devices, functioning on the basis of various physico-chemical phenomena (chemical and biochemical reactions, molecular diffusion, motion of viscous liquids, melting or glass transition of solids, etc.)
- **Labels** or **cards** which are **inexpensive** and **do not require external energy** when in operation

What do TTIs do?

- Monitor the thermal history of **single product items** they are affixed to
- Provide information on the product both **before purchase** (warehouses, transportation, display at the point of sale, etc.) and **after purchase** (when the **end-user** is in the possession of the product)

Cumulative Measurements of Thermal History

What can't a TTI do?

- It cannot store an analytical record of the thermal history *T(t)* (in contrast to electronic devices)
- It cannot record when and where a thermal abuse may have occurred

What do we expect from a TTI?

- A display of a cumulative indication related to the thermal history of each **single item** of the perishable product
- **Lower cost** than electronic devices, which are not intended for single items
- **Small in size**

Time-Temperature Integral: a numerical value, associated with the thermal history, providing simple (but very important) information on the **Residual Shelf Life** of the monitored product.

Time-Temperature Integral

$$RSL(t') = SL - \frac{1}{k(T_S)} \cdot \int_0^{t'} k(T)dt$$

Time-Temperature Integral of the perishable product

$$k(T) = k_0 \cdot \exp\left(-\frac{E_a}{RT}\right)$$

RSL: **Residual Shelf Life**

SL: (conventional) **Shelf Life**

k: chemical kinetic constant of product degradation

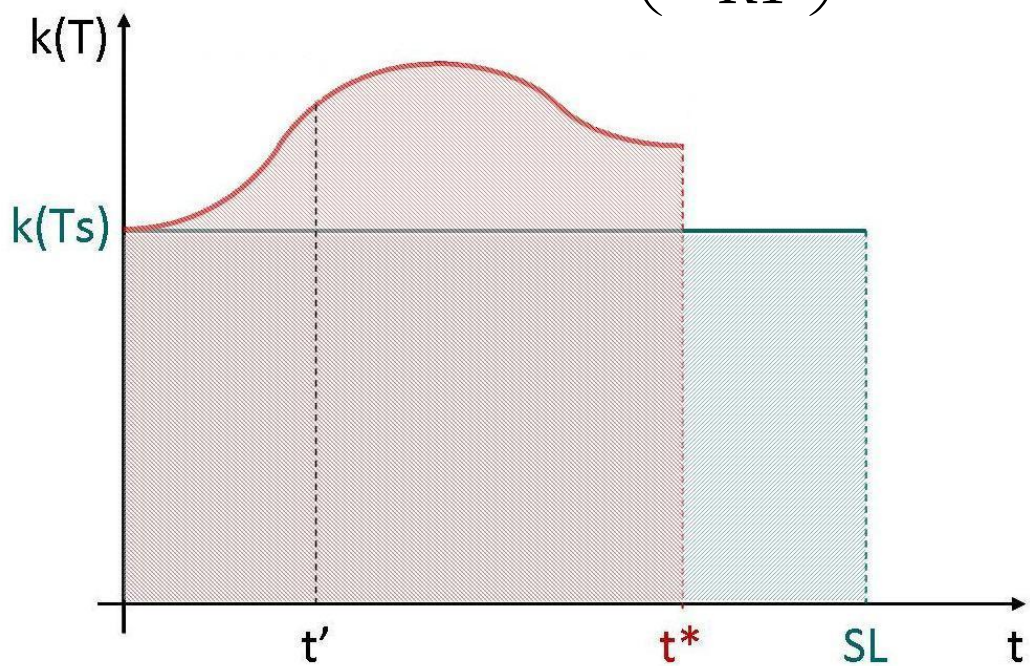

Expiry time (t^*): $RSL = 0$

$$\int_0^{t^*} k(T)dt = k(T_S) \cdot SL$$

If some thermal abuses occurs, t^* comes earlier than SL.

Time-Temperature Indicators and Time-Temperature Integral

In order to predict the **Residual Shelf Life** (RSL) of a perishable product, a TTI must be capable of measuring a **Time-Temperature Integral**:

Perishable product: $$RSL = SL - \frac{1}{k(T_S)} \cdot \int_0^t k(T)dt$$

Time-Temperature Integral of the perishable product

TTI prediction: $$RSL = SL - cI = SL - c \cdot \int_0^t \omega(T)dt$$

Time-Temperature Integral measured by the TTI

TTI Design Criteria

The Time-Temperature Integral measured by the TTI must match the Time-Temperature Integral of the perishable product.

$$\omega(T) = \frac{k(T)}{ck(T_S)}$$

$$\omega(T) = \frac{k_0}{ck(T_S)} \cdot \exp\left(-\frac{E_a}{RT}\right)$$

$$\omega(T) = k_{TTI} \cdot \exp\left(-\frac{E_{TTI}}{RT}\right)$$

$$\log \omega(T) = \log k_{TTI} - \frac{E_{TTI}}{RT}$$

$$E_{TTI} = E_a$$

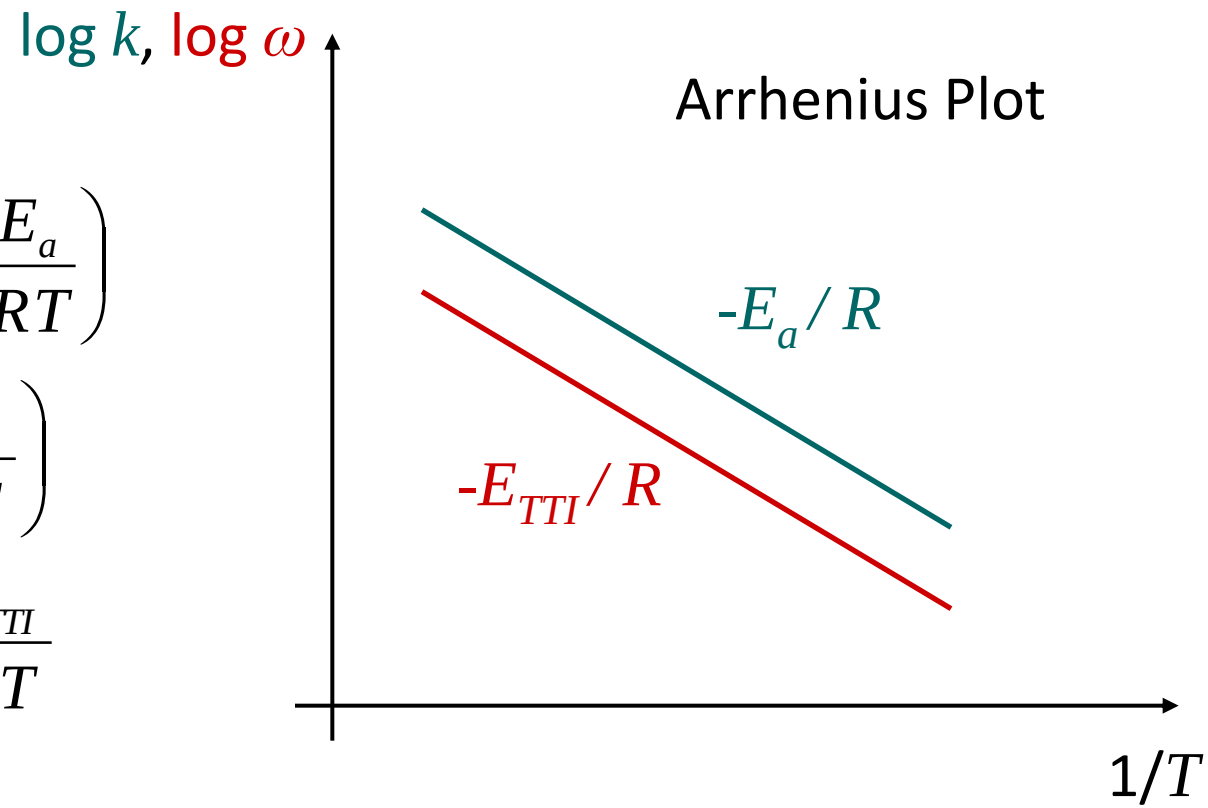

Classification of TTIs

CURRENTLY AVAILABLE COMMERCIAL TTIs

- **Partial-history**
  (only for detection of thermal abuses)
- **Full-history**
  (prediction of residual shelf life)
  - End-Point Response
  - Progressive Response (qualitative)

For a comprehensive technical discussion on TTIs, refer to:
M. Maschietti, Time-Temperature Indicators for Perishable Products, *Recent Patents on Engineering* 4 (2010) 129-144

Visual Response of Commercial Full-history TTIs

Progressive response TTIs

A spot continuously darkens (or lightens), at a rate which depends on temperature.
Drawback: the readings are **not quantitative** and may be subjective or even confusing.

Endpoint TTIs

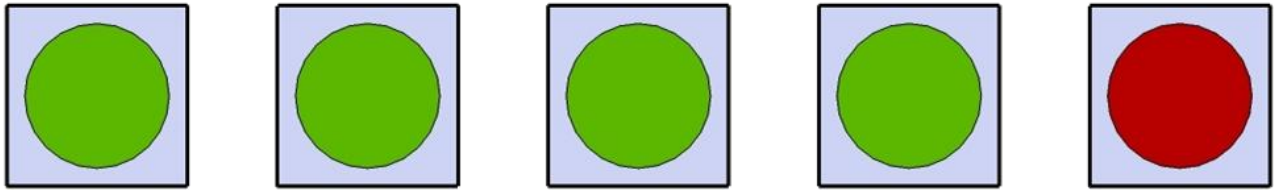

No visual change occurs before a threshold value of I is reached. At the threshold, the colour change occurs rapidly.
Drawback: **no information** is provided **before the threshold** is reached (the end user is not informed on the residual shelf life at the moment of purchase).

Specifications of the New TTIs

- The indication of the Time-Temperature Integral of the monitored product will be **quantitative** and easy to read (e.g., an advancing coloured indication along residual shelf life markings);

- The indication will be irreversible and never stops advancing (**full-history TTI**);

- The **response** of the TTIs will be **calibrated** by making minimal changes to the manufacturing parameters, in order to match the degradation kinetics of several perishable products;

- The device will be applicable to **both refrigerated and frozen products**;

- The device will be **tamper resistant**.

Commercial Production Model of the New TTIs

Thermo-sensitive cards reporting predictions of the residual shelf life, through an advancing coloured indication bar

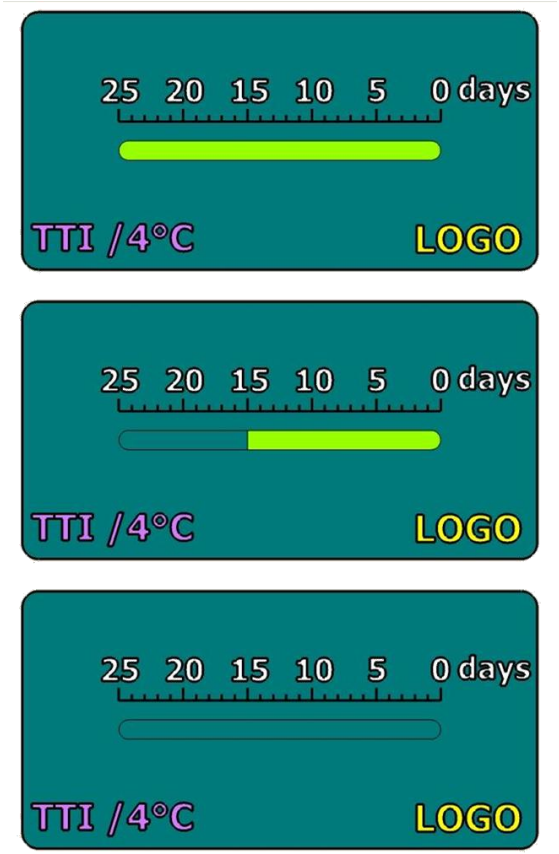

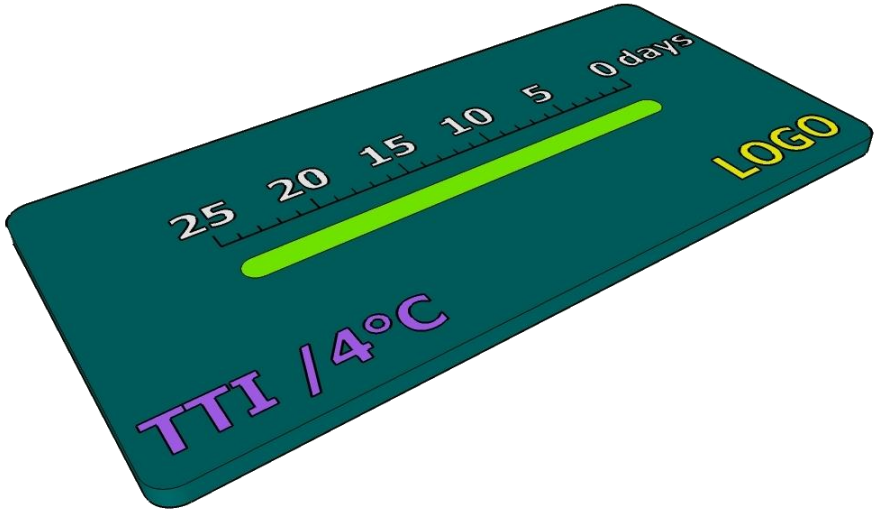

Air Pressure TTI (I)

A channel structure is realized welding two plastic layers, realized as in the figure.

A high-viscosity coloured liquid (VL) initially fills the Indication Conduit (IC).
VL is forced to flow through a sub-millimetric channel (Capillary Conduit, CC), progressively emptying IC and partially filling the downstream chamber LP.

The flow is caused by an air pressure difference, created in fabrication, between the high-pressure chamber (HP) and the low-pressure chamber (LP).

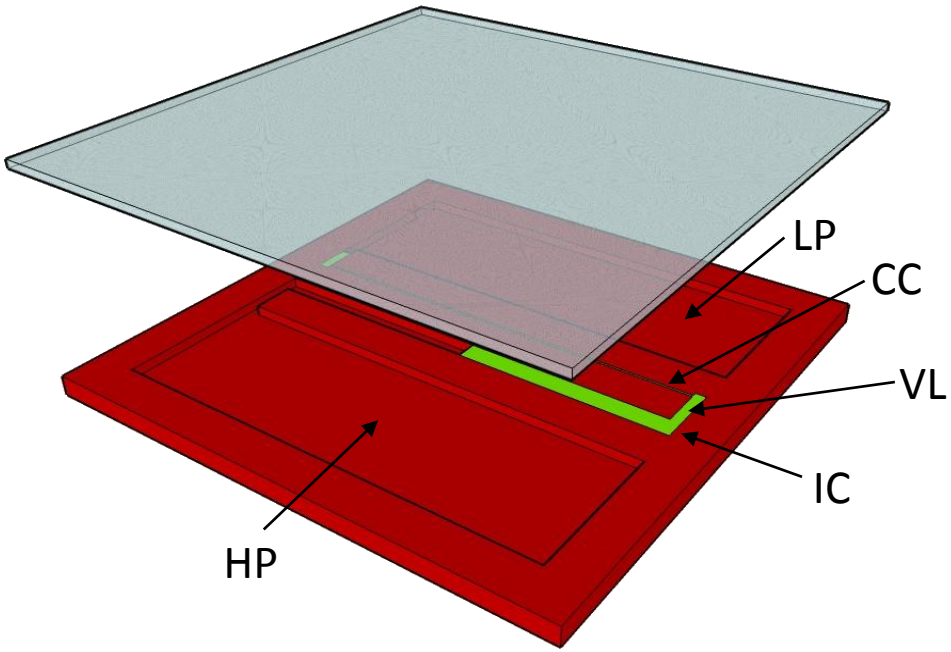

If temperature increases, the high-viscosity liquid strongly accelerates, because of strong viscosity reduction. On the other hand, if temperature decreases the viscous liquid decelerates. As a result, the coloured indication never stops or goes back (full-history TTI) and provides an integrated time-temperature measurement.

Air Pressure TTI (II)

The device can operate both at pressure higher than atmospheric and under vacuum.

Typical pressure difference: 0.2 – 0.4 atm

HP and LP must be sufficiently larger than IC, to contain enough air to avoid a substantial decrease in the pressure difference during the motion of VL.

The device is closed, i.e., it is not influenced by external pressure.

No external parameters, other than temperature, influence the response of the device.

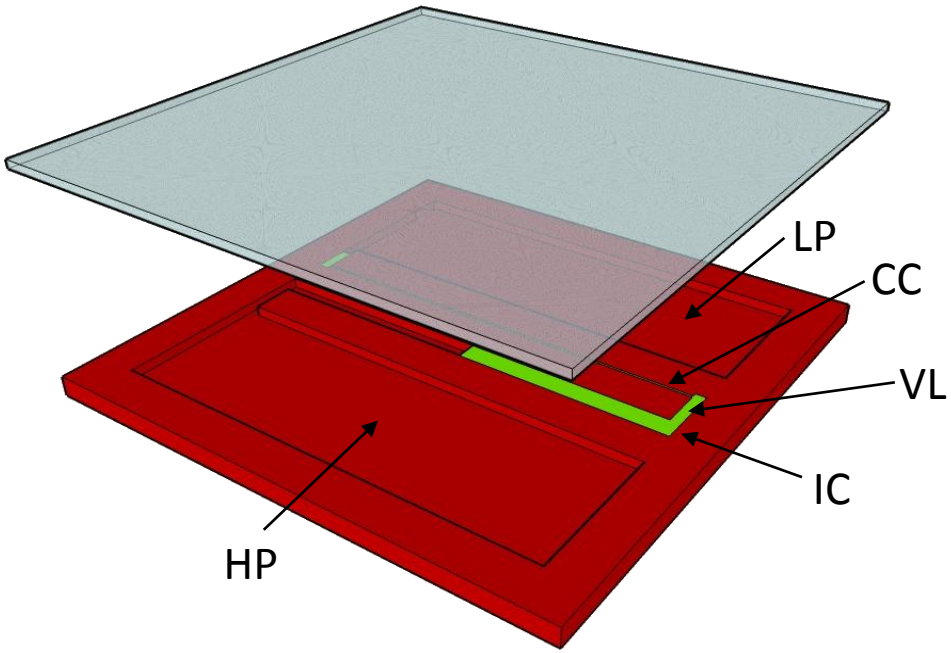

Air Pressure TTI (III)

Rate of progress of the indication:

$$v = \frac{1}{S_I} \cdot \frac{\pi r_c^4}{8 \mu L_c} \cdot \Delta P$$

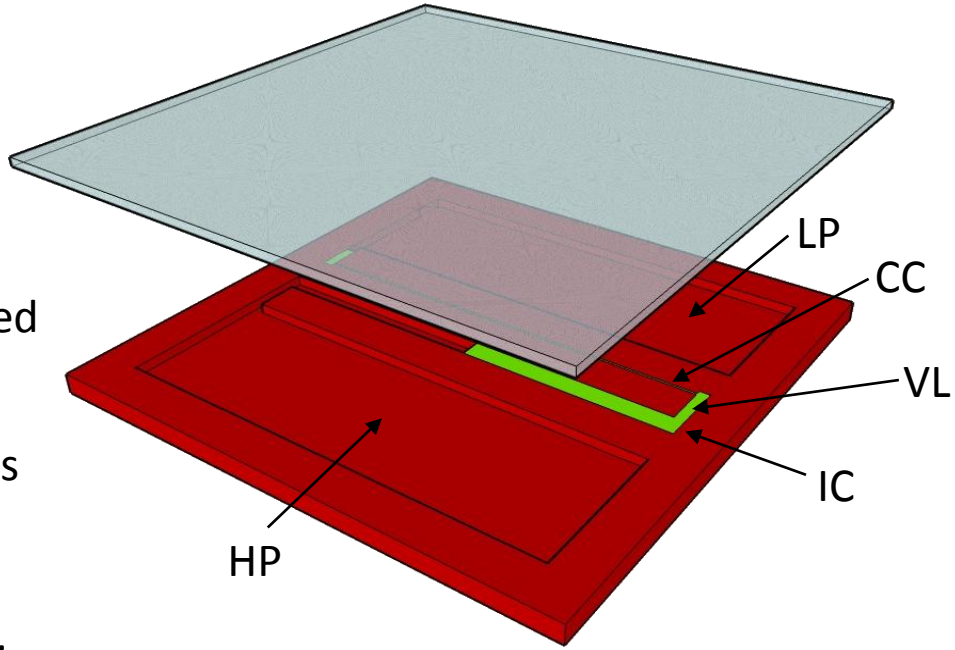

The response of the TTI can be calibrated operating on several parameters:

- **choice of the viscous liquid**, by means of its viscosity (μ);
- **pressure difference** (ΔP);
- **length and equivalent radius of CC** (L_c , r_c);
- **cross section of IC** (S_I).

All the mentioned parameters rule the rate of progress at constant temperature.

Liquid viscosity strongly depends on temperature, thus it is the parameter governing the thermo-sensitivity of the device.

Analysis of TTI Response : Functioning Time

Capillary diameter vs. liquid viscosity to attain the specified functioning time

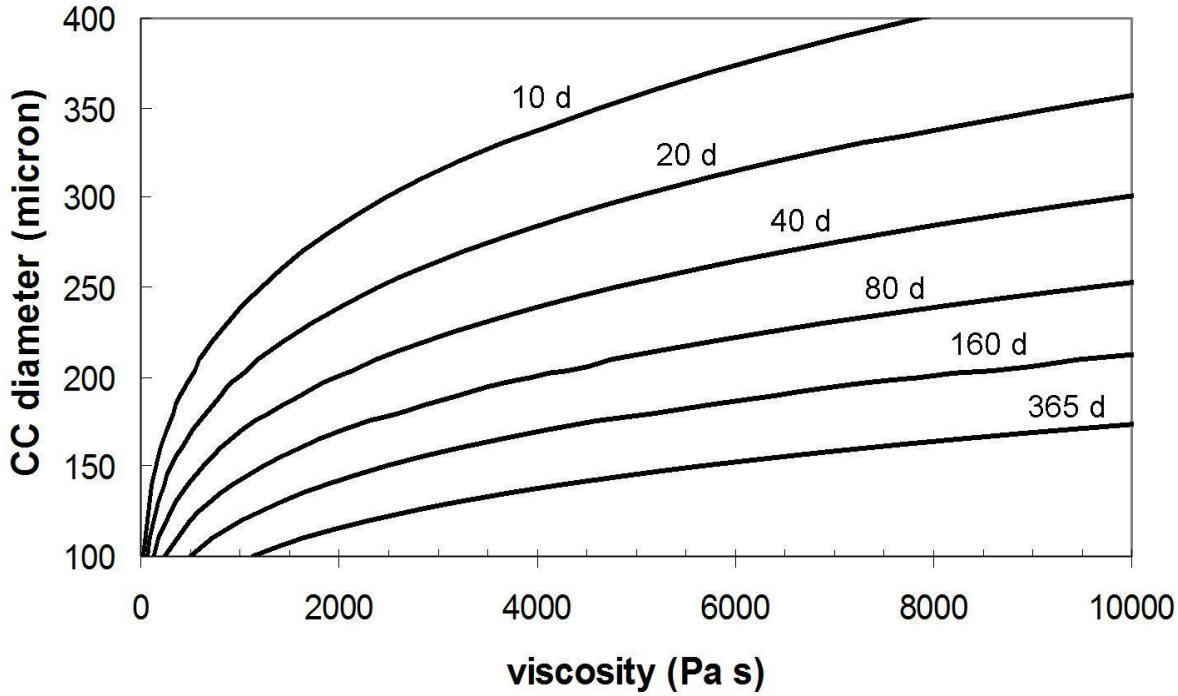

Fixed parameters:

- S_I = 1 mm^2
- L_c = 35 mm
- ΔP = 0.2 atm

Functioning time: up to 1 year with reasonable values of CC diameter and liquid viscosity

High-viscosity liquids: linear polimer melts (e.g., oligomers of polyisobutylene or polyglycerols)

Analysis of TTI Response: Thermo-sensitivity of the TTI

Air pressure indicator:

$$I = \int_0^t \omega(T)dt = \int_0^t v(T)dt = \int_0^t \frac{k_g \Delta P}{\mu(T)}$$

For polymer melts,
at T > 1.2 Tg:

$$\mu(T) = \mu_0 \cdot \exp\left(\frac{E_\eta}{RT}\right)$$

Therefore:

$$\omega(T) = v(T) = \frac{k_g \Delta P}{\mu_0} \cdot \exp\left(-\frac{E_\eta}{RT}\right)$$

The design criteria are fulfilled:

$$\omega(T) = k_{TTI} \cdot \exp\left(-\frac{E_{TTI}}{RT}\right)$$

Thermo-sensitivity of the air pressure TTI: Arrhenius type

To match the degradation behaviour:

$$E_\eta = E_a$$

Activation Energy Terms

Food products

$$E_a = 10 - 40 \quad kcal/mol$$

but more frequently

$$E_a = 15 - 22 \quad kcal/mol$$

Drug formulations

$$E_a = 10 - 25 \quad kcal/mol$$

Air-pressure TTI

Polyisobutylenes $E_a = 12 - 20 \quad kcal/mol$

Polyglycerols $E_a = 15 - 20 \quad kcal/mol$

The air pressure indicator has the potential to match the degradation behaviour of many perishable products.

Phase Equilibrium TTI (I)

The basic functioning principles are the same as the air pressure TTI.

However, in this case the pressure difference which causes the motion of VL is generated by the partial evaporation of two liquids which have different vapour pressures ($p_{s1} > p_{s2}$).

An appropriate amount of the high- and low-volatility liquids is charged, after evacuation, in the HVL and LVL chambers, respectively.

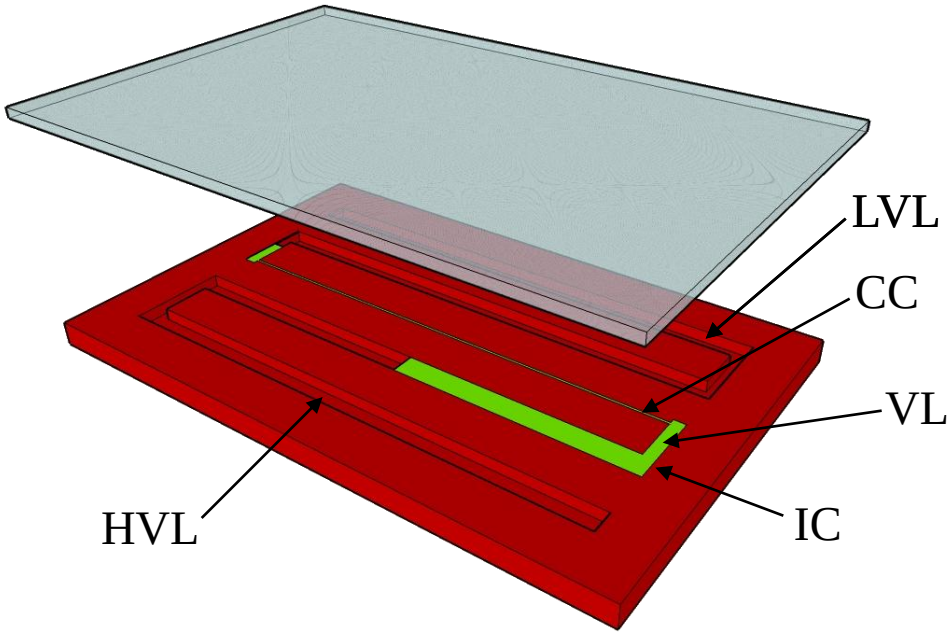

The spontaneous partial evaporation of the two liquids establishes a phase equilibrium in the two chambers and sets the pressure at the values of the vapour pressures.

Phase Equilibrium TTI (II)

Rate of progress of the indication:

$$v = \frac{1}{S_I} \cdot \frac{\pi r_c^4}{8 \mu L_c} \cdot (p_{s1} - p_{s2})$$

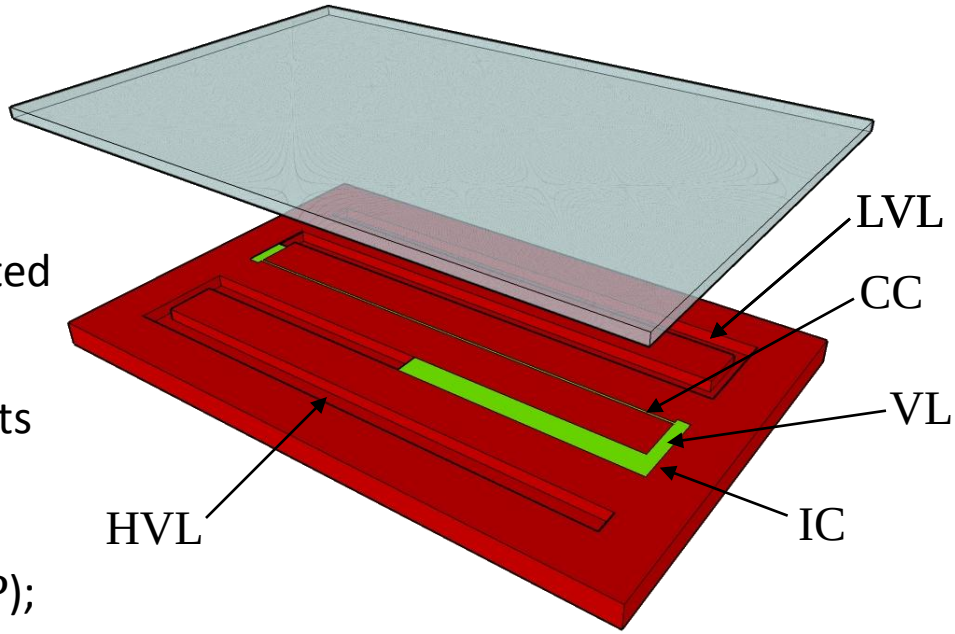

The response of the TTI can be calibrated operating on several parameters:

- **choice of the viscous liquid**, by means of its viscosity (μ);
- **choice of the evaporating liquids**, which rules the applied pressure difference (ΔP);
- **length and equivalent radius of CC** (L_c , r_c);
- **cross section of IC** (S_I).

The dimensions of the TTI can be further reduced, because there is no need to overdesign the chambers: the pressure difference will remain constant!

The thermo-sensitivity of the device can be further increased, for a fixed viscous liquid, because the applied pressure difference increases with temperature.

Air Pressure TTI Prototypes

First generation of **laboratory prototypes**:

- white layer (60 x 60 x 8 mm), milled to form the desired channel structure
- threaded holes for shut-off valves and plugs
- transparent cover layer (60 x 60 x 2 mm)
- steel needle or silica capillary glued (red colour) in a channel
- layers sealed by a double-sided adhesive tape
- high-viscosity liquid (blue colour)
- air charged upstream and downstream (approx. 1.2 atm)
- device activation

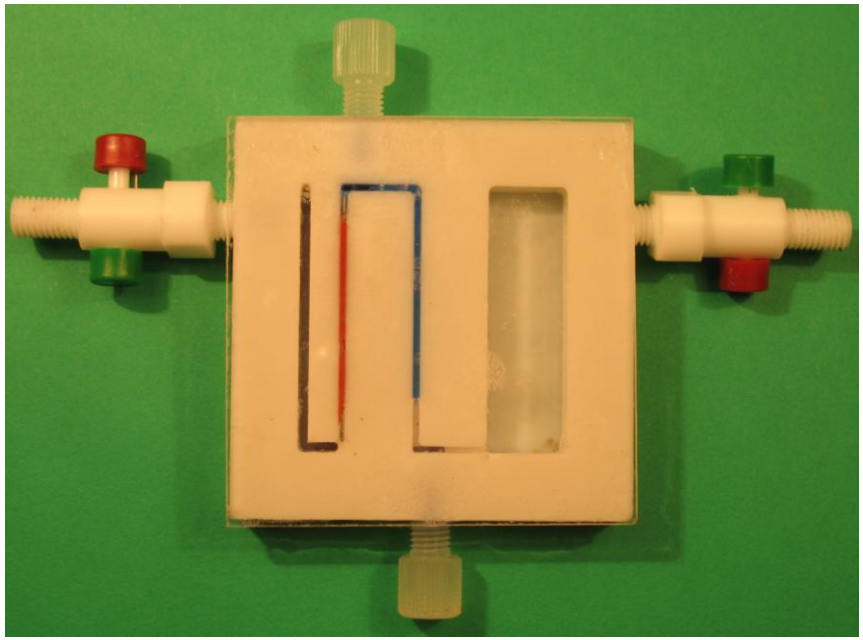

Experiments were carried out placing the prototype in a thermostatic bath (both in isothermal and non-isothermal conditions) and measuring the progress of the blue liquid for some days.

Typical Experimental Behaviour

Progress of the high-viscosity liquid vs. time elapsed since activation

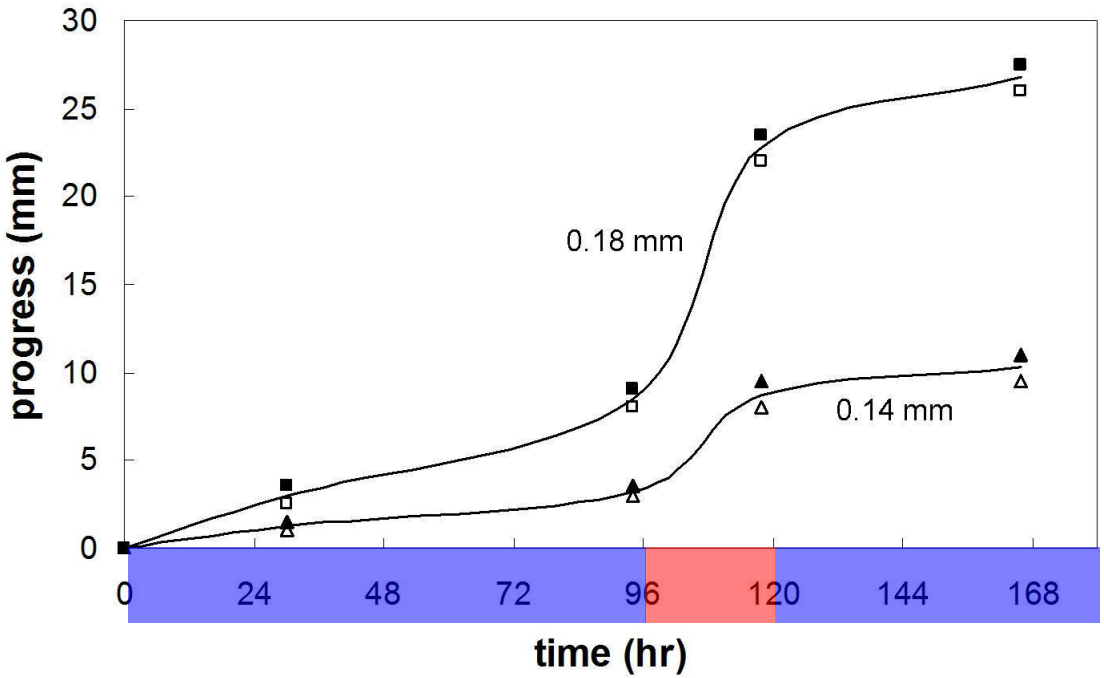

Experimental parameters:

- S_I = 1 mm²
- L_c = 35 mm
- ΔP = 0.24 atm
- Capillary i.d. 0.14 mm and 0.18 mm
- Polyisobutene (mw: 920)
- Duration: 1 week
  4 days: 4°C;
  1 day: 20°C;
  2 days: 4°C

Strong effect of the capillary diameter on the rate of progress: $v_{180} / v_{140} \cong 2.7$

The thermo-sensitivity is clearly shown by the sharp increase of the rate of progress between 96 and 120 hours:

$$v(20°C) / v(4°C) \cong 7$$

$$E_\eta \cong 20 \quad kcal/mol$$

Conclusions

The new TTIs are very promising, since they**:**

- are capable of providing a visual response which is both quantitative and easy to read;
- provide a response which is Arrhenius type with activation energies in the same range of many perishable products;
- can be calibrated to a large degree by means of minimal manufacturing changes;
- are applicable both to refrigerated and frozen products.

Future developments:

- performing further scale-down step: from laboratory prototypes to a thermal-history card which can be mass produced;
- testing the new TTIs on target perishable products, to verify in further detail the capability of matching product degradation kinetics.

Project partners

University of Rome "La Sapienza"
Department of Chemical Engineering, Materials, and Environment
Dr. Marco Maschietti
maschiet@ingchim.ing.uniroma1.it

Montalbano Industria Agroalimentare S.p.A.
www.montalbanofood.com